3000R-xxx Series Reduced Port Valve

Quick Spec	
Product Scope	
Size Range	1/2" – 4", Reduced Port
Body Type	3-pc, non Swing-out design
End Connections	Flanged, NPT, Weld, Custom
Pressure Rating	up to 4000 psi WOG (275 bar) & up to ASME Class 900[2]
Temperature Range / WSP	-20°F up to 550°F / up to 450 psi steam -29°C up to 288°C / up to 31 bar steam
Body, Ball, Stem Material	Standard & Special alloys
Ball Seats/ Thrust Washers	PTFE & others[1]
Stem Packing	Adjustable, Live Loaded PTFE or Graphite
Body Seals	PTFE, Graphite & Others[1]
Operator / Mounting Pad	Manual Lever, with Optional Lock / ISO 5211
Design Standards	
Design	ASME B16.34[2]
Flange	ASME B16.5
Thread/Weld Design	ASME B1.20.1 / ASME B16.11
Testing Standards	
Pressure Testing	100%
Approvals	
ISO 9001:2008 Certified Manufacturer	
API 607 4th Edition	
Canadian Registration Numbers (CRN) and coverage available on website[3]	
PED Category 1	

Features

- Up to 4000 psi service
- Special barstock body material options including Alloy 20, Duplex, Hastelloy C, Monel, Titanium, 254 SMO, Bronze and others
- Special end connection options, including extended weld ends, RTJ flanges, DIN flanges, SAE Code 61 / 62 flanges, SAE O-ring, Grayloc, Tube End, and others
- ISO 5211 Mounting pad
- Triple sealed blow-out proof stem
- Adjustable, live-loaded stem packing
- Deep pocketed resilient seats
- Double body - end cap seals
- Enclosed end cap bolts threaded into body
- Statically grounded
- Lockout option
- API 607 Firesafe with proper materials (CS or SS body, PTFE, RPTFE or CRPTFE seats with graphite packing and seals)
- 100% pressure tested (API 598 optional)

Materials of Construction		
Part	Stainless Steel	Carbon Steel
Body	A351 CF8M	A216 WCB
End Cap	A351 CF8M	A216 WCB
Ball	AISI 316 SS	
Seat	PTFE & others[1]	
Stem	A479 S31600	
Seal, Body	PTFE, graphite & others[1]	
Secondary Seal, Body	PTFE, graphite & others[1]	
Thrust Washer	PTFE & others[1]	
Packing	PTFE, Graphite	
O-Ring, Stem	Viton, EPDM	
Lock Washer	AISI 304 SS	
Anti-Static Spring	AISI 316 SS	
Gland Bushing	AISI 316 SS	
Anti-Static Pin	AISI 316 SS	
Body Bolt or Stud, Body Nut	A193 B8 Cl. 1 A194 Gr.8	A193 B7, A194 Gr.2H
Belleville Washer	17-7PH SS	
Handle	Carbon Steel	
Cover, Handle	Vinyl	

[1] See page 9

[2] ASME B16.34 Class Ratings
1/2" - 1-1/2"R — Class 900 (2220 psi CS/2160 psi SS @ 100°F)
2" - 2-1/2"R — Class 600 (1480 psi CS/1440 psi SS @ 100°F)
3" - 4"R — Class 400 (990 psi CS/960 psi SS @ 100°F)

[3] Use ASME B16.34 ratings for CRN

Key Features

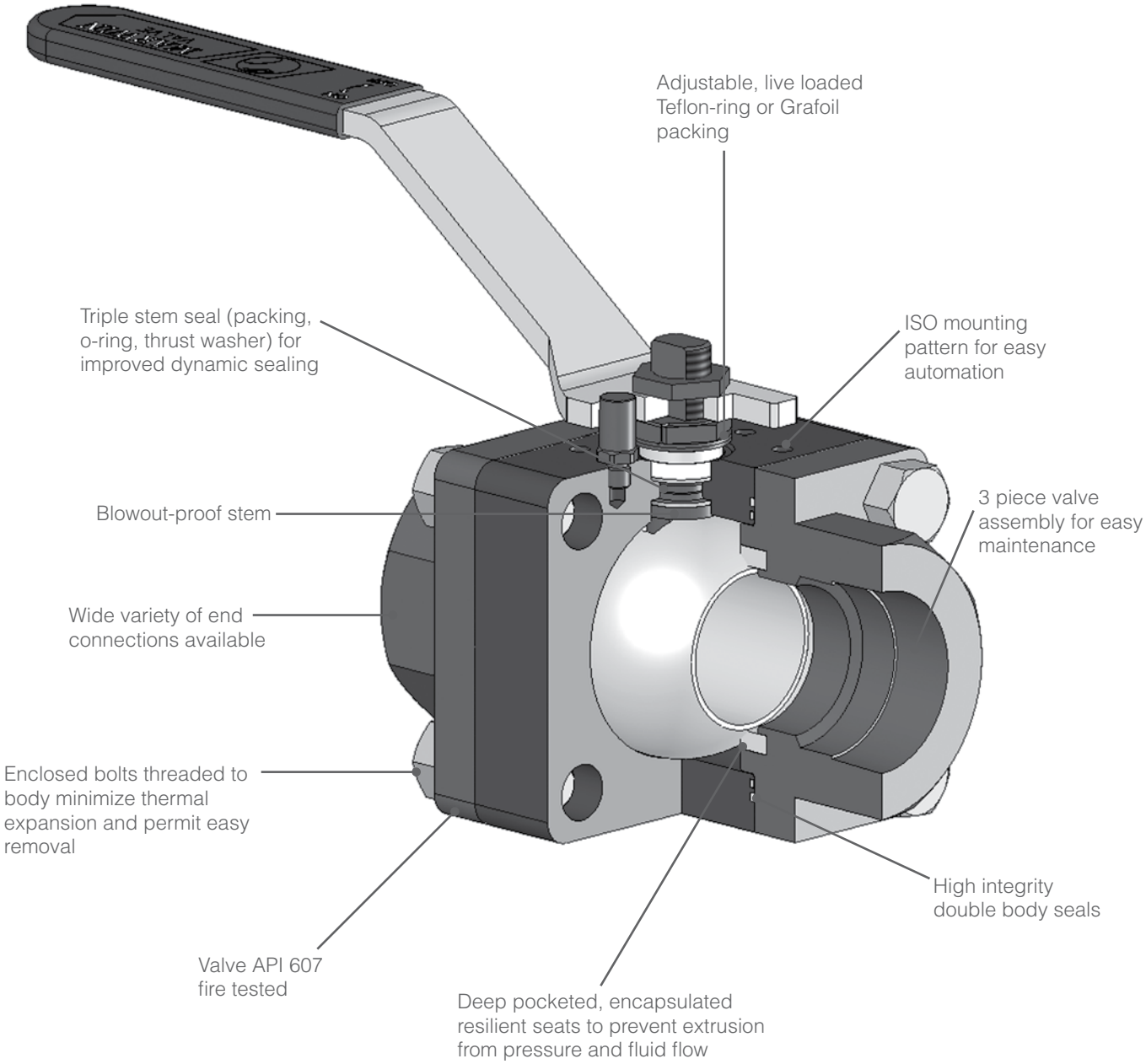

Cross Sectional Seat View Showing The Seat Pocket

Standard Soft Seats
Standard ball valve "soft" seat material rely upon compression and movement of the seat material to conform to the ball surface for a tight seat. Deep machined pockets protect the seat and minimizes the chance of media and pressure liftting the seat causing damage. Materials include PTFE, RPTFE, C-RPT-FE, UHMWPE, KEL-F, and others upon request

Note: A material's tendency to compress or move under load may limit their use at higher pressures and temperatures. Consult the appropriate P/T Chart for proper application information.

Pressure / Temperature Limits

Pressure-Temperature Curves Virgin PTFE Seats

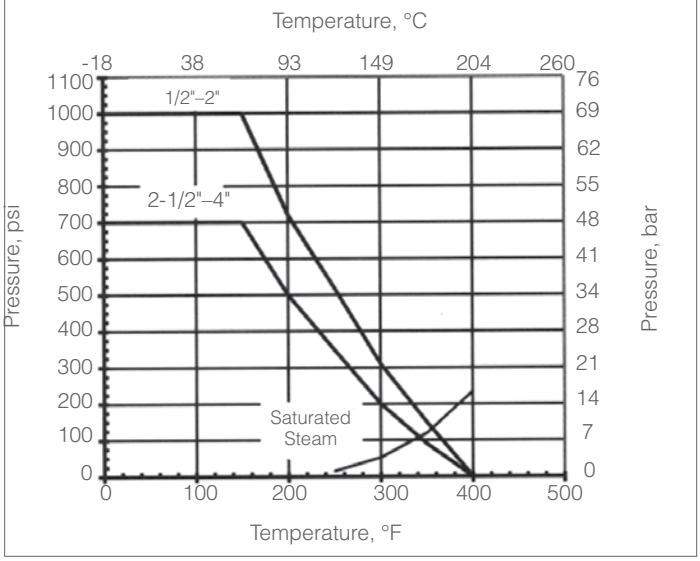

PTFE: PolyTetraFluoroEthylene – Virgin Teflon is a dense Fluorocarbon based polymer that has excellent chemical resistance, good thermal stability, and low coefficient of friction. (White, -50°F to +450°F)

Pressure-Temperature Curves Glass-Filled PTFE Seats, RPTFE

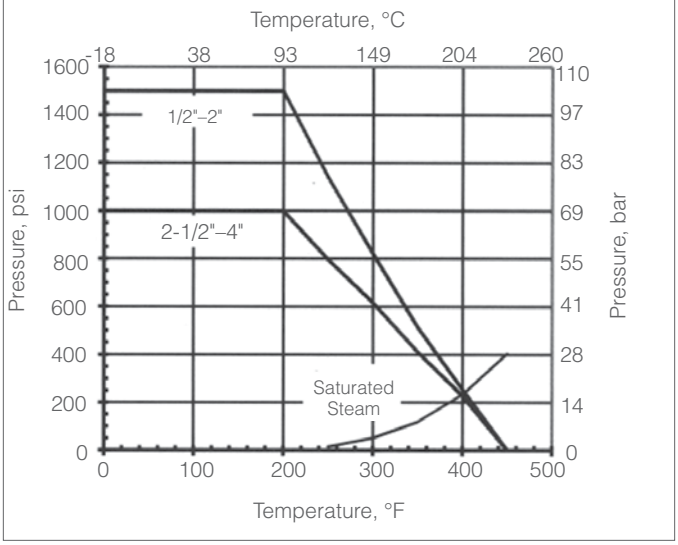

RPTFE: 25% Glass Filled Teflon – Glass reinforced PTFE offers high chemical resistance with improved mechanical strength, stability and wear resistance compared to virgin PTFE. (Off-white, -50°F to +450°F)

Pressure-Temperature Curves Carbon-Filled PTFE

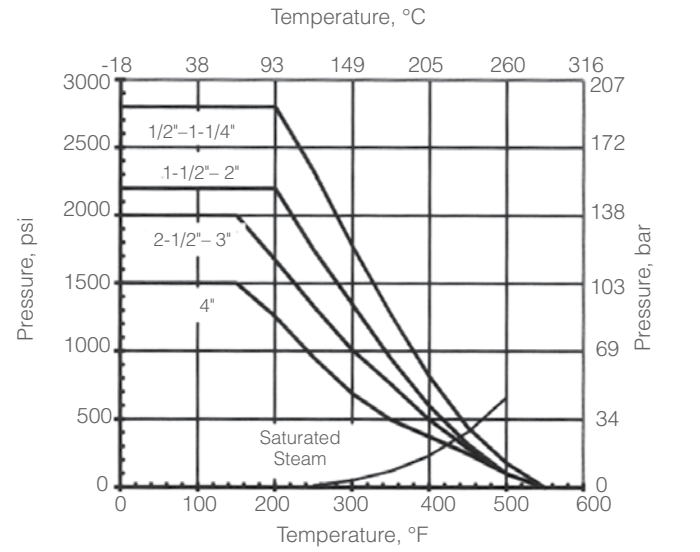

CRPTFE: 25% Carbon Filled Teflon – Carbon reinforced PTFE has improved mechanical strength, stability and wear resistance compared to glass reinforced PTFE. (Black, -50°F to +475°F)

Pressure-Temperature Curves Delrin

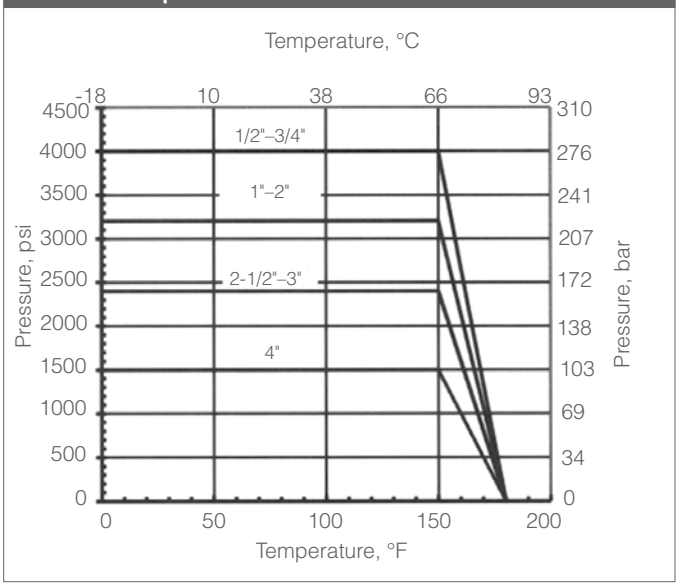

Delrin: Acetal Homopolymer – Delrin is a thermoplastic with high mechanical strength and stiffness, good dimensional stability, low fricition, and good wear and abrasion resistance. It is used for higher pressure at moderate temperatures over a limited range of chemical applications. (Creamy white, -20°F to +180°F)

Pressure-Temperature Curves PEEK Seats

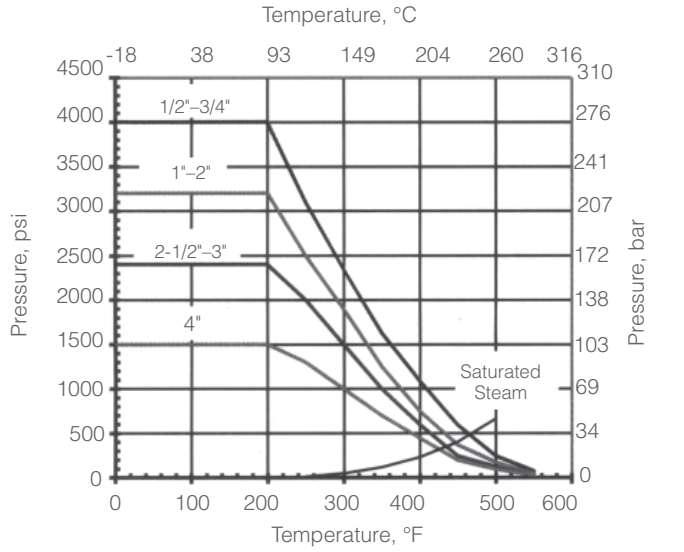

PEEK: PolyEtherEtherKeytone – PEEK is a high performance thermoplastic with excellent mechanical properties and chemical resistance. It is available FDA/USDA approved. It is used where higher pressures and temperatures are required. (Tan, -70°F to +550°F)

Pressure-Temperature Curves Carbon-Filled PEEK Seats

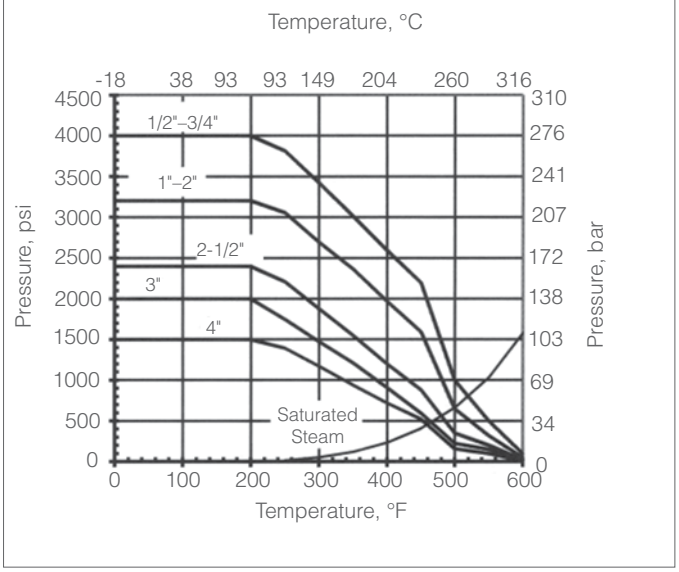

C-PEEK: 25% Carbon Filled PEEK – Carbon reinforced PEEK provides the maximum compressive strength, stiffness, and wear resistance available. It extends the useable upper temperature compared to unfilled PEEK. (Black, -70°F to +600°F)

Pressure-Temperature Curves UHMW-PE Seats

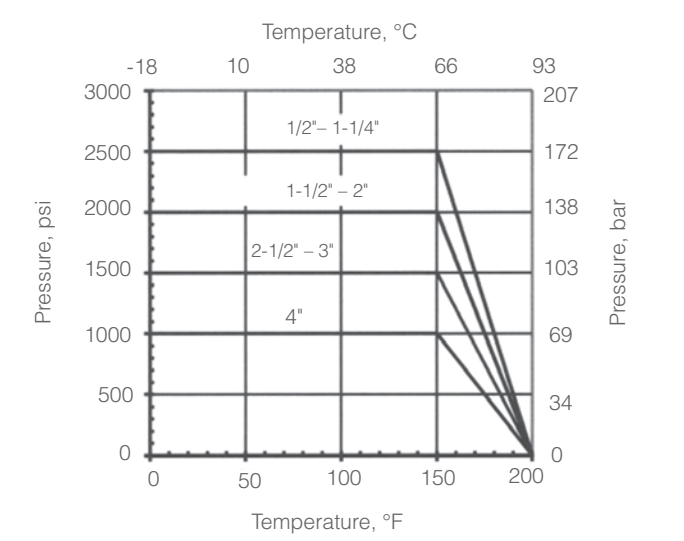

UHMWPE: Ultra High Molecular Weight Polyethylene - UHMWPE is a semi-crystalline material with excellent chemical, wear and abrasion resistance. It is available FDA / USDA approved. It is primarily used for abrasive applications, and where Teflon cannot be used. (Opaque white, -20°F to +200°F)

Pressure-Temperature Curves KEL-F (PCTFE) Seats

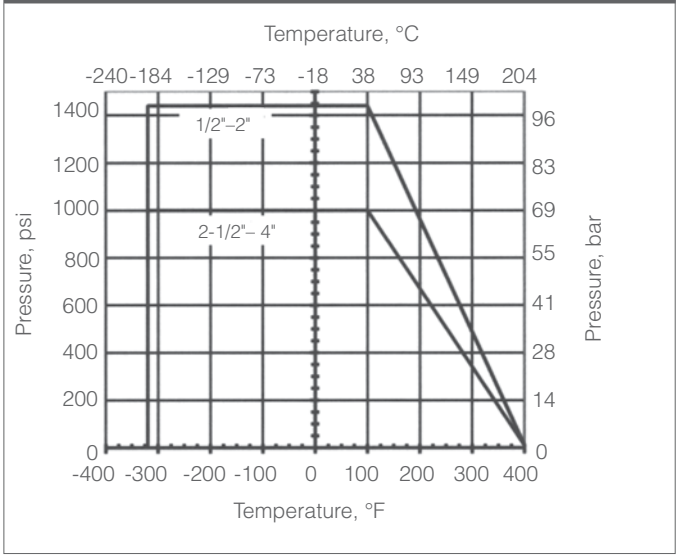

PCTFE (KEL-F): PolyChloro TriFluoroEthylene - KEL-F is a fluorocarbon based polymer that has cryogenic temperature capabilities and exhibits good chemical resistance and mechanical properties. (Translucent white, -320°F to +400°F)

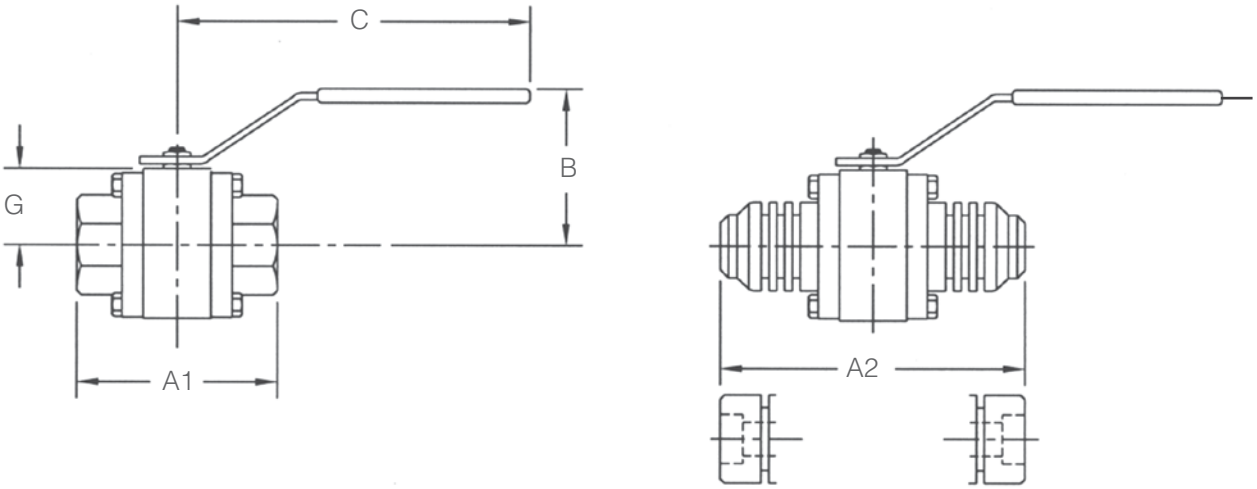

FNPT Ends

Dimensions, Inches								
Size	Port	Dimensions						
Reduced Port		FNPT, SW, BW		ESW, EBW		B	C	G
		A1	Weight (lbs)	A2*	Weight (lbs)			
1/2"	0.43	2.95	2.2	5.50	2.90	2.6	5.4**	1.24
3/4"	0.56	3.20	2.8	5.50	3.80	2.8	5.4**	1.31
1"	0.74	3.90	5.0	6.00	6.10	3.2	7.6	1.54
1-1/4"	1.00	4.40	7.0	6.50	8.50	3.6	7.6	1.47
1-1/2"	1.25	4.70	9.5	7.00	11.5	4.3	8.9	1.71
2"	1.50	5.50	12.8	7.50	15.2	4.5	8.9	1.86
2-1/2"	1.93	5.60	22.0	8.50	26.5	4.7	8.9	2.30
3"	2.44	9.00	29.7	9.50	29.9	5.4	13.8	2.70
4"	3.00	8.80	38.5	11.12	48.6	5.9	19.7	3.44

Dimensions, Metric								
Size	Port	Dimensions						
Reduced Port		FNPT, SW, BW		ESW, EBW		B	C	G
		A1	Weight (kgs)	A2*	Weight (lkg)			
DN15	10,9	75	1,0	140	1,3	67	138**	31,5
DN20	14,2	81	1,3	140	1,7	70	138**	33,3
DN25	18,8	99	2,3	152	2,8	80	193	39,2
DN32	25,4	112	3,2	165	3,9	92	193	37,4
DN40	31,8	119	4,3	178	5,2	108	225	43,5
DN50	38,1	140	5,8	191	6,9	113	225	47,3
DN65	49,0	142	10,0	216	12,0	118	225	58,5
DN80	62,0	229	13,5	241	13,6	136	351	68,9
DN100	76,2	224	17,5	282	22,0	150	500	87,4

* ESW and EBW end-to-end lengths "A" are same as ASME B16.10 Class 300 ball valve

** Handle length "C" for 1/4" - 1/2"F exotic material (barstock) valves and for EB (extended bonnet) valves is 6.1 in. (155mm)

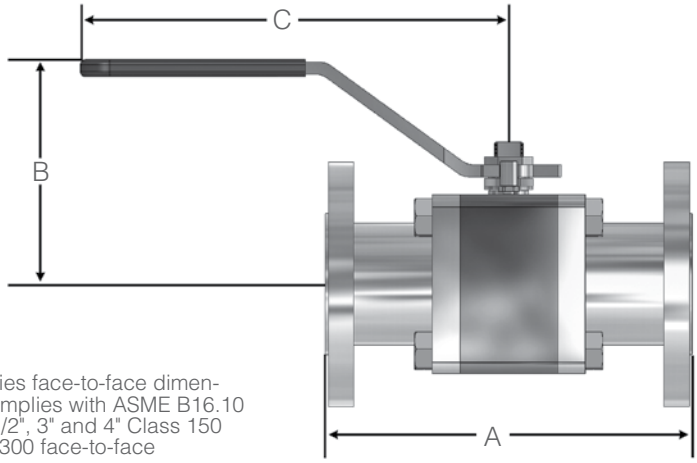

3000R Series face-to-face dimension "A" complies with ASME B16.10 except 2-1/2", 3" and 4" Class 150 use Class 300 face-to-face dimensions

Reduced Port, Flanged Ends (ANSI 150, 300, 600, 900)

Dimensions, Inches

Valve Size	Flange Size	Dimensions			Weight, lbs
		A	B	C	
1/2"	150#	4.25	2.6	5.4**	4.0
	300#	5.50	2.6	5.4**	5.7
	600#	6.50	2.6	5.4**	6.3
	900#	8.50	2.6	5.4**	6.7
3/4"	150#	4.62	2.8	5.4**	5.2
	300#	6.00	2.8	5.4**	8.7
	600#	7.50	2.8	5.4**	9.5
	900#	9.00	2.8	5.4**	10.0
1"	150#	5.00	3.2	7.6	8.1
	300#	6.50	3.2	7.6	11.9
	600#	8.50	3.2	7.6	13.4
	900#	10.00	3.2	7.6	14.1
1-1/4"	150#	5.50	3.6	7.6	11.0
	300#	7.00	3.6	7.6	15.8
	600#	9.00	3.6	7.6	18.2
	900#	11.00	3.6	7.6	19.4
1-1/2"	150#	6.50	4.3	8.9	15.2
	300#	7.50	4.3	8.9	22.3
	600#	9.50	4.3	8.9	25.6
	900#	12.00	4.3	8.9	27.3
2"	150#	7.00	4.5	8.9	21.2
	300#	8.50	4.5	8.9	27.8
	600#	11.50	4.5	8.9	33.2
	900#	14.50	4.5	8.9	35.6
2-1/2"	150#	9.50	4.7	11.0	34.6
	300#	9.50	4.7	11.0	45.2
	600#	13.00	4.7	11.0	52.5
3"	150#	11.12	5.4	13.8	45.0
	300#	11.12	5.4	13.8	57.8
	600#	14.00	5.4	13.8	62.2
4"	150#	12.00	5.9	19.7	59.9
	300#	12.00	5.9	19.7	85.7
	600#	17.00	5.9	19.7	120.0

Dimensions, Metric

Valve Size	Flange Size	Dimensions			Weight, kgs
		A	B	C	
DN15	150#	108	67	138**	1,8
	300#	140	67	138**	2,6
	600#	165	67	138**	2,8
	900#	216	67	138**	3,1
DN20	150#	117	70	138**	2,4
	300#	152	70	138**	3,9
	600#	191	70	138**	4,3
	900#	229	70	138**	4,5
DN25	150#	127	80	193	3,7
	300#	165	80	193	5,4
	600#	216	80	193	6,1
	900#	254	80	193	6,4
DN32	150#	140	92	193	5,0
	300#	178	92	193	7,2
	600#	229	92	193	8,3
	900#	279	92	193	8,8
DN40	150#	165	108	225	6,9
	300#	191	108	225	10,1
	600#	241	108	225	11,6
	900#	305	108	225	12,4
DN50	150#	178	113	225	9,6
	300#	216	113	225	12,6
	600#	292	113	225	15,1
	900#	368	113	225	16,1
DN65	150#	191	118	279	15,7
	300#	241	118	279	20,5
	600#	330	118	279	23,8
DN80	150#	203	136	351	20,4
	300#	282	136	351	26,2
	600#	356	136	351	28,2
DN100	150#	229	150	500	27,2
	300#	305	150	500	28,9
	600#	432	150	500	54,4

** Handle length "C" for 1/4" - 1/2"F exotic material (barstock) valves and for EB (extended bonnet) valves is 6.1 in. (155mm)

3000R Series Top Mounting Dimensions

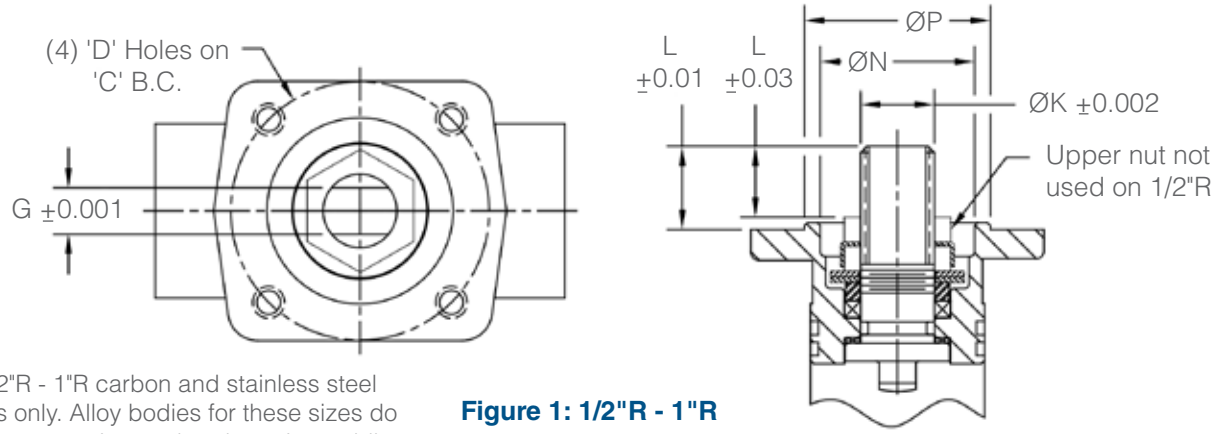

For 1/2"R - 1"R carbon and stainless steel bodies only. Alloy bodies for these sizes do not have mounting pad and require saddle bracket for automation

Figure 1: 1/2"R - 1"R

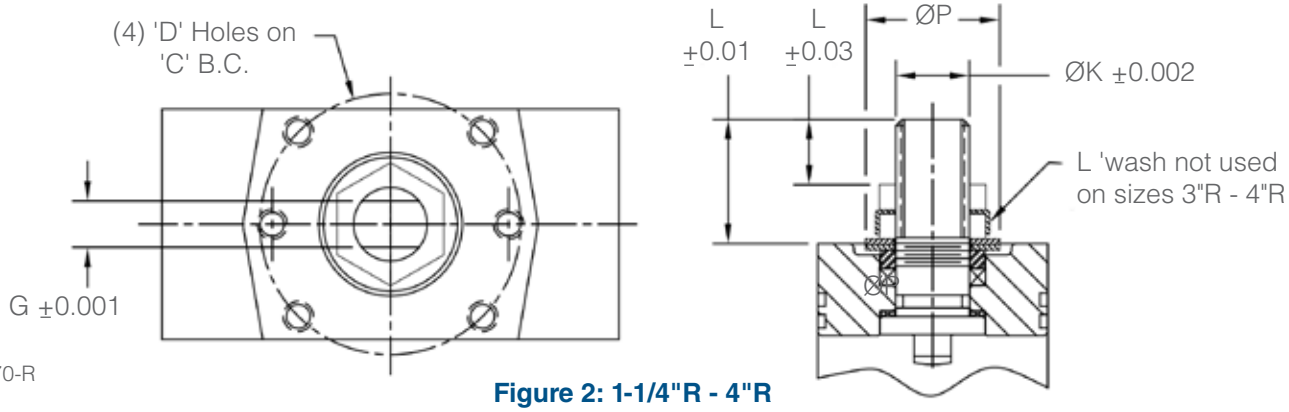

ART1070-R

Figure 2: 1-1/4"R - 4"R

Dimensions, Inches										
Size	Fig.	C	D (Thread)	Mtg	G	ØK	L	M	ØN	øP
1/2"	1	Ø1.42	10-24UNC	F03	0.214	0.391	0.19	0.30	0.83	1.00
3/4"	1	Ø1.42	10-24UNC	F03	0.214	0.391	0.30	0.26	0.84	1.00
1"	1	Ø1.65	10-24UNC	F04	0.294	0.467	0.53	0.41	0.98	1.18
1-1/4"	2	Ø1.65	10-24UNC	F04	0.294	0.467	0.79	0.38	—	0.85
1-1/2", 2"	2	Ø1.97	1/4-20 UNC	F05	0.351	0.587	1.05	0.54	—	0.98
2-1/2"	2	Ø1.97	1/4-20 UNC	F05	0.540	0.701	1.13	0.45	—	1.40
3"	2	Ø2.76	5/16-18 UNC	F07	0.628	0.865	1.30	0.50	—	1.75
4"	2	Ø2.76	5/16-18 UNC	F07	0.701	0.943	1.45	0.64		1.97

Dimensions, Metric										
Size	Fig.	C	D (Thread)	Mtg	G	ØK	L	M	ØN	øP
DN15	1	Ø36	10-24UNC	F03	5,44	9,93	4,83	7,62	21,3	25,4
DN20	1	Ø36	10-24UNC	F03	5,44	9,93	7,62	6,60	21,3	25,4
DN25	1	Ø42	10-24UNC	F04	7,47	11,86	13,46	10,41	24,9	30,0
DN32	2	Ø42	10-24UNC	F04	7,47	11,86	20,07	9,65	—	21,6
DN40, DN50	2	Ø50	1/4-20 UNC	F05	8,94	14,91	26,67	13,72	—	24,9
DN65	2	Ø50	1/4-20 UNC	F05	13,71	17,80	28,70	11,43	—	35,6
DN80	2	Ø70	5/16-18 UNC	F07	15,95	21,97	33,02	12,70	—	44,5
DN100	2	Ø70	5/16-18 UNC	F07	17,80	23,95	36,83	16,26		50,0

Operating Torque & Flow Coefficient (Customary)

Valve Size Inches	Operating Torque, in-lb						Flow Coefficient CV
	PTFE		RPTFE		CRPTFE		
	Pressure	Torque	Pressure	Torque	Pressure	Torque	
1/2"	1000	72	1500	72	2800	72	8
3/4"	1000	72	1500	72	2800	96	15
1"	1000	108	1500	96	2800	120	34
1-1/4"	1000	204	1500	135	2800	240	48
1-1/2"	1000	220	1500	220	2200	419	85
2"	1000	240	1500	353	2200	779	125
2-1/2"	700	432	1000	830	2000	1460	275
3"	700	1348	1000	1515	2000	2640	460
4"	700	1460	1000	2358	1500	2995	700

Operating Torque & Flow Coefficient (Metric)

Valve Size NPS	Operating Torque, Nm			
	PTFE	RPTFE	CRPTFE	Flow Coefficient, Kv
DN15	8,1	8,1	8,1	6,9
DN20	8,1	8,1	10,8	12,9
DN25	12,2	10,8	13,6	29,2
DN32	23,0	15,3	27,7	41,3
DN40	24,9	24,9	47,3	73
DN50	27,1	39,9	88	108
DN65	48,8	94	165	237
DN80	152	171	298	396
DN100	165	266	338	602

PTFE, RPTFE, and CRPTFE are the most common seat materials. Operating torque given is for maximum CWP seat rating of valve (see pressure-temperature charts). For required torque for actuator sizing, apply service factor of 1.2 for normal operating conditions. More or less torque may be required depending upon operating differential pressure across closed ball, fluid, frequency of operation, etc.
Consult the Marwin Flow Sizing Program for torques at specific differential pressures and additional seat materials. It may be downloaded for free at www.marwinvalve.com

Prefix		Model		Size		Body Mat'l		1	2	3	4	5	6	7	8	9	10	11	12	13	14	15	16	17	18

Prefix	
	No Special Options
AM	Ammonia Service w/ US Vented Ball
EB	3" Bolted Bonnet Extension (1000 psi max)
FS	Firesafe (TG, RG or SG seats & GV or GE Pack)
NA	NACE Service
OX	Oxygen Service w/ US Vented Ball
VA	Vacuum Service

	Model Number
3000R	Reduced Port

	Size
050	1/2"
075	3/4"
100	1"
125	1-1/4"
150	1-1/2"
200	2"
250	2-1/2"
300	3"
400	4"

	Body Material
CS	Carbon Steel WCB
S6	Stainless Steel CF8M
6L	316L
A2	Alloy 20
DU	Duplex
HC	Hastelloy C
MN	Monel
TI	Titanium
ZZ	Other Special Alloy

1&2	End Connections
PT	FNPT
SW	FSW
SE	FSW Extended
F1	150# FE
F3	300# FE
F6	600# FE
E4	XBWE Extended Sch. 40
E8	XBWE Extended Sch. 80
F9	900# FE
F5	1500# FE
ZZ	Non-standard

3&4	Trim (Ball / Stem)
S6	316SS (standard for WCB & CF8M valves except PEEK or CPEEK seats)
6L	316L
6P	316SS / 17-4 PH (standard for valves with PEEK & CPEEK seats)
A2	Alloy 20
DU	Duplex
HC	Hastelloy C
MN	Monel
TI	Titanium
ZZ	Other Special Alloy

5&6	Seat / Body Seals / Thrust Washer
TF	PTFE/PTFE & NA/PTFE
RT	RPTFE/RPTFE & NA/RPTFE
SF	C-RPTFE/RPTFE & NA/C-RPTFE
DL	Delrin/Viton & NA/RPTFE
PK	PEEK/Viton &NA/PEEK (Use 6P Trim)
CP	C-PEEK/Graphite/PEEK (Use 6P Trim)
KF	Kel-F/PTFE & NA/PTFE
UM	UHMWPE/Viton & NA/UHMWPE
TG	PTFE/GR/GR
RG	RPTFE/GR/GR
SG	C-RPTFE/GR/GR
ZZ	Non-standard

Note: NA = "Non-asbestos (Aramid/NBR)

7&8	Packing / Stem O-Ring
TV	PTFE/Viton
TE	PTFE/EPDM
GV	Grafoil/Viton
GE	Grafoil/EPDM
UV	UHMWPE/Viton
ZZ	Non-standard

9&10	Handle & Gear Operator
NN	None
HL	Handle Lever
HD	Handle Lever with Locking Device
ZZ	Non-standard

11&12	Actuator		
00	None		
P1	UT-0A-DA STD	S1	UT-0-SR STD
P2	UT-0-DA STD	S2	UT-1-SR STD
P3	UT-1-DA STD	S3	UT-2-SR STD
P4	UT-2-DA STD	S4	UT-2.5-SR STD
P5	UT-2.5-DA STD	S5	UT-3-SR-STD
P6	UT-3-DA STD	S6	UT-3.5SR STD
P7	UT-3.5-DA STD	S7	UT-4-SR STD
P8	UT-4-DA STD	SF	UT-4.5-SR STD
PF	UT-4.5-DA STD	S8	UT-5-SR STD
P9	UT-5-DA STD	S9	UT-6-SR STD
PA	UT-6-DA STD	SA	UT-7-SR STD
PB	UT-7-DA STD	SJ	UT-7.5-SR STD

11&12	Operation (Cont'd)
M1	ER-1-2.5-4 110 VAC
M2	ER-2-5-4 110 VAC
M3	ER-3-5-4 110 VAC
M8	ER-4-10-4 110 VAC
M4	ER-6-15-4 110 VAC
M5	ER-10-15-4 110 VAC
M9	ER-15-30-4 110 VAC
MA	ER-20-12-4 110 VAC
M7	ER-38-14-4 110 VAC
ZZ	Non-standard

13&14	Solenoid Feature	Act. Type
00	None	
3A	3W 8551-120VAC N4 UT-0/5	SR
3C	3W EF8551-120VAc N7 UT-0/5	SR
3J	3W 8317G35-120VAC N4 UT-0/2.5	SR
3M	3W 8321G1-120VAC N4 UT-3/5	SR
3Q	3W EF8317G35-120VAC N7 UT-0/2.5	SR
3R	3W EF8321G1-120VAC N7 UT-3/5	SR
4A	4W 8551-120VAC N4 UT-0A	DA
4B	4W 8551-120VAC N4 UT-0/5	DA
4D	4W EF8551-120VAC N7 UT-0A	DA
4E	4W EF8551-120VAC N7 UT0/5	DA
ZZ	Non-Standard	

15	Limit Switch*
0	None
A	Rotork SF01200-10UA7A3 (NEMA 4) to UT-0/3
B	Rotork SF01200-10UA7A3 (NEMA 4) to UT-3.5/7
C	Rotork SX01200-10UA7E3 (NEMA 7) to UT-0/3
D	Rotork SX01200-10UA7E3 (NEMA 4) to UT-3.5/7
Z	Non-Standard

*with (2) SPDT Mech. Switches

16	Positioner
0	None
A	Siemens 760P (3-15 psi), for UT-0/3
B	Siemens 760P (3-15 psi), for UT-3.5/7
C	Siemens 760E (4-20mA), for UT-0/3
D	Siemens 760E (4-20mA), for UT-3.5/7
E	Siemens 2-IQ (4-20mA), for UT-0/3DA
F	Siemens 2-IQ (4-20mA), for UT-3.5/7DA
Q	Siemens 2-IQ (4-20mA), for UT-0/3SR
R	Siemens 2-IQ (4-20mA), for UT-3.5/7DA
Z	Non-Standard

17	Fail Position
0	None / No Spring Actuator
1	Fail Open - 80 psi supply
2	Fail Closed - 80 psi supply
3	Fail Open - 60 psi supply
4	Fail Closed - 60 psi supply

18	Accessory
00	None
04	Air Filter Regulator